4.12 TYPICAL WIRING SCHEMATIC

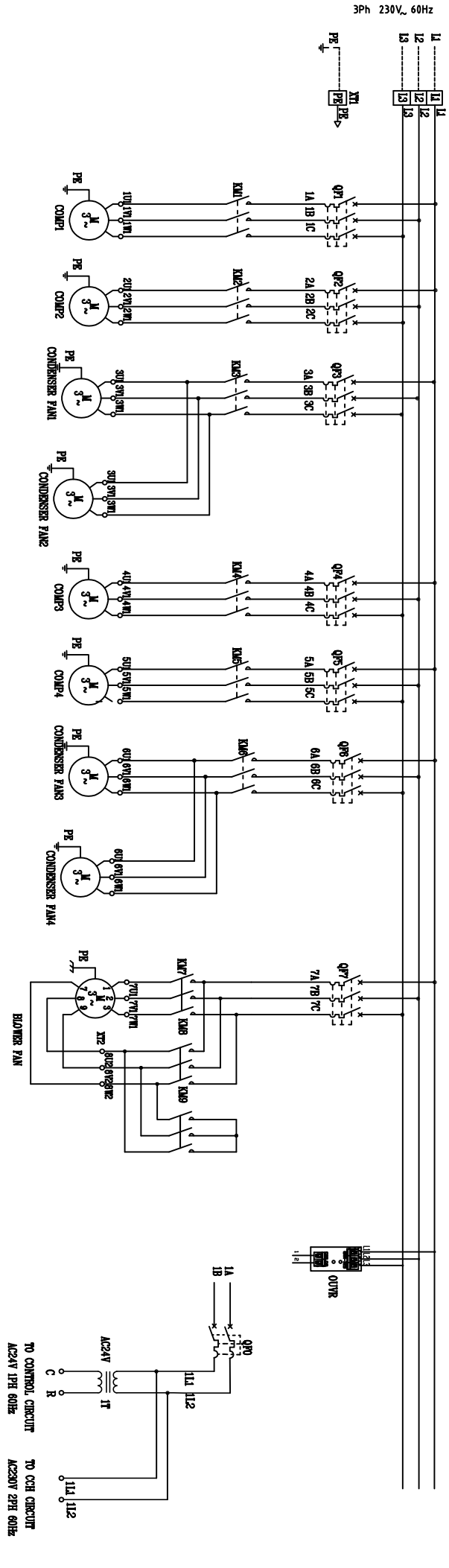

VKKR8008&DA800L

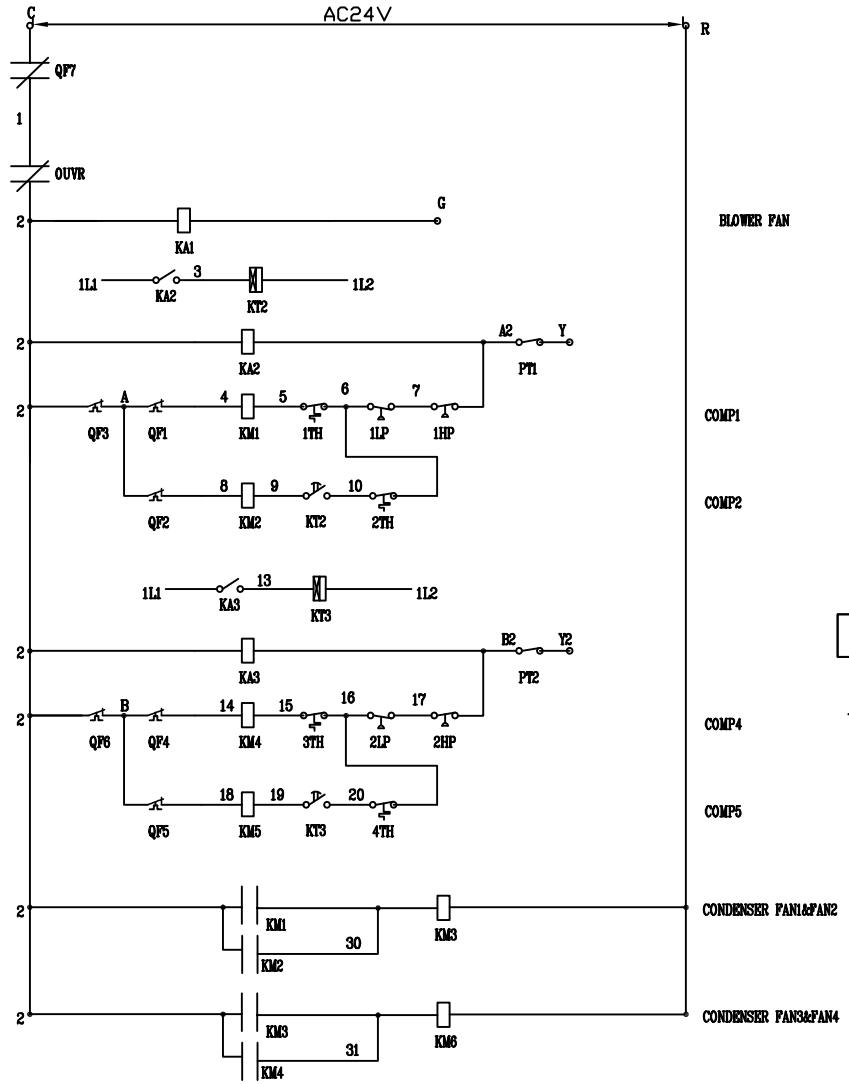

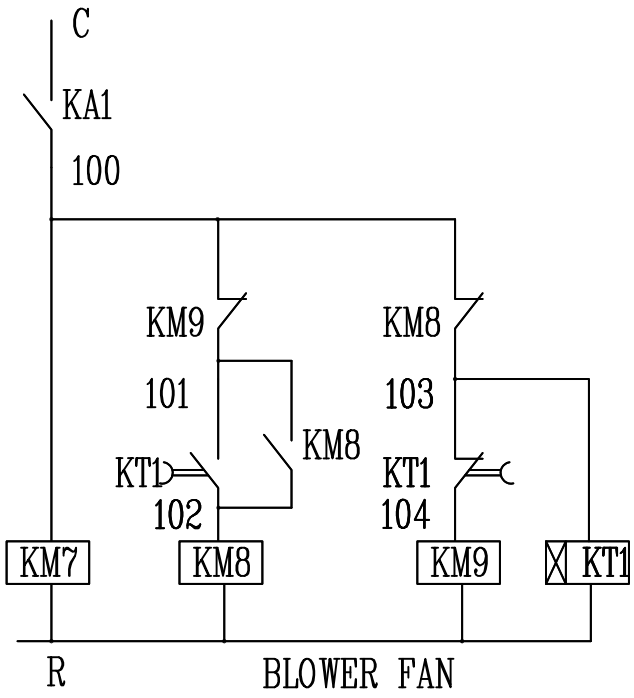

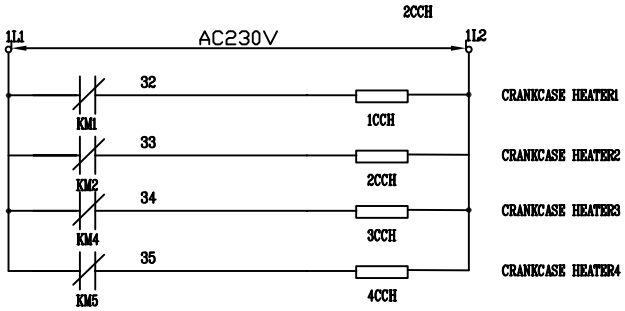

C	1	-C
R	2	-R AC24V Pay special attention to the wiring sequence
Y	3	COMP1 -Y
Y2	4	COMP2 -Y2
G	5	Blower fan -G
5	6	1#Exhaust switch
6	7	2#Exhaust switch
10	8	
6	9	1#Low voltage switches
7	10	
6	11	1#High voltage switching
7	12	
A2	13	Thermal protection of the fan1&fan2
Y	14	
A2	15	3#Exhaust switch
15	16	
16	17	4#Exhaust switch
20	18	
16	19	2#Low voltage switches
17	20	
16	21	2#High voltage switching
17	22	
B2	23	Thermal protection of the fan3&fan4
Y2	24	
B2	25	AC 230V
1L1	26	
1L2	27	

KM	CONTACTOR
QF	CIRCUIT BREAKER
OUVR	OVERUNDER VDLTAGE RELAY
T	TRANSFORMER & Compressor protection
LP	LOW PRESSURE SWITCH
HP	HIGH PRESSURE SWITCH
TH	Exhaust temperature switch
CCH	CRANKCASE HEATER
PT	Thermal protection of the fan
KT	Time relays

VKKR800&DA800L

2